Instruction register

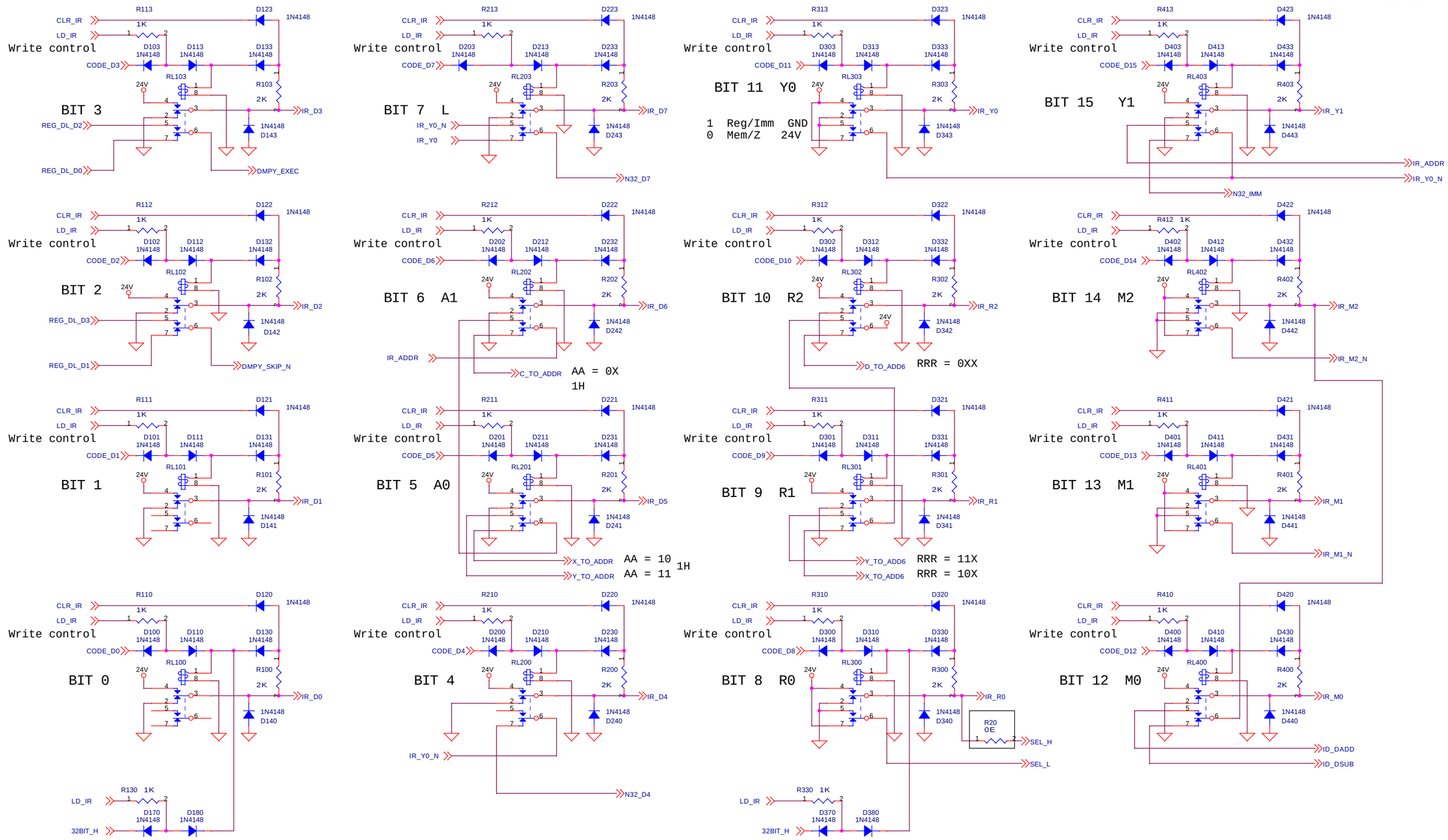

Instruction Register

RISC Relay CPU
PROG
PROG1750

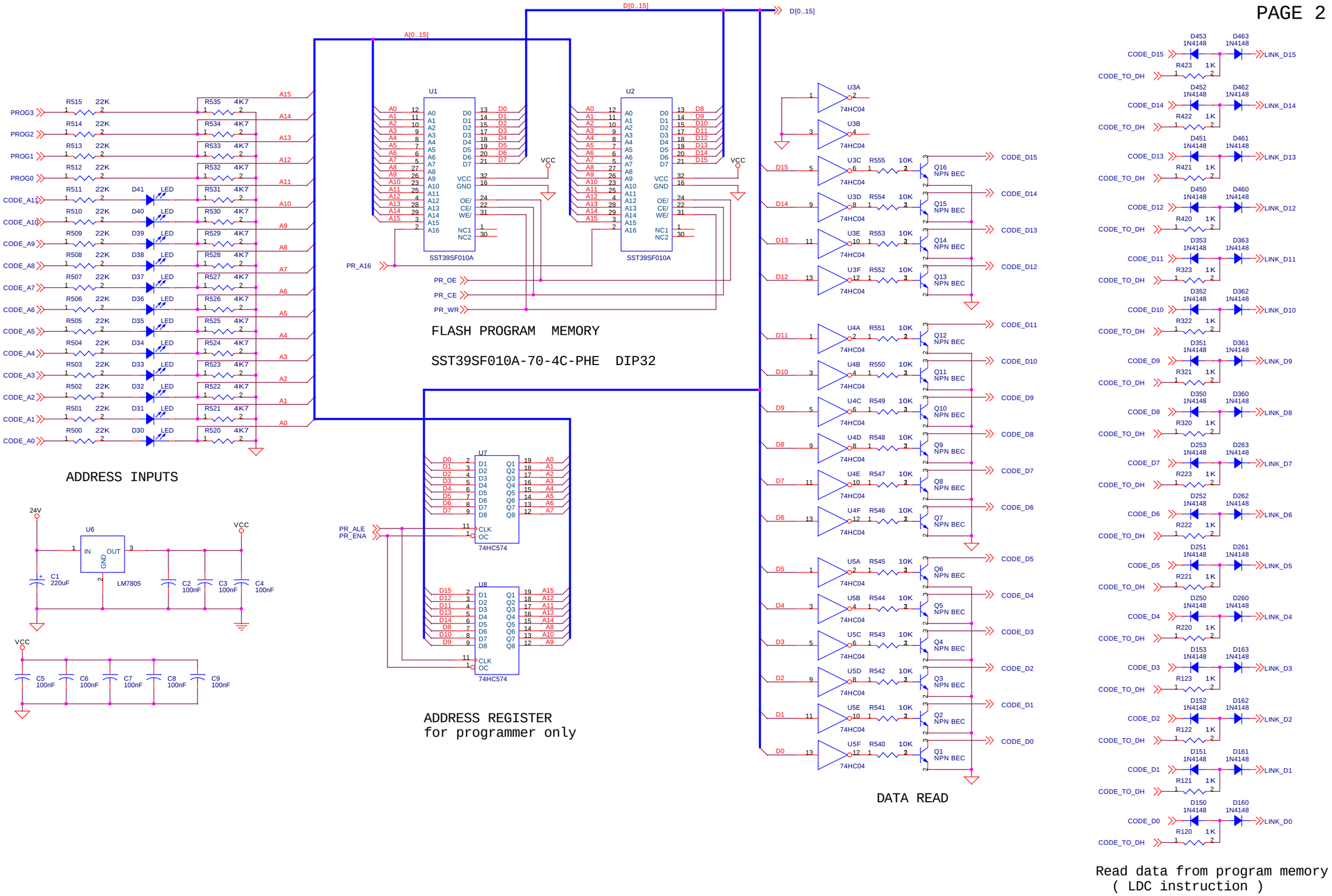

RISC Relay CPU

PROG

PROG1750

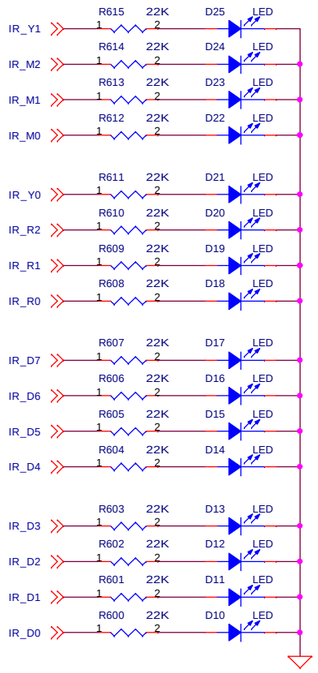

These LEDs display the current instruction

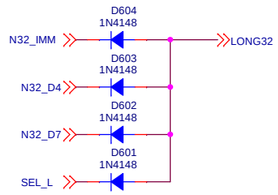

LONG32 pulled to GND, except when it is a 32-bit instruction

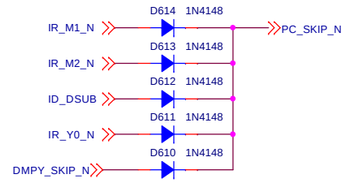

Active, except when next instruction must be skipped in DMPY instr.
Forces CY from PC bit0 to bit1 HIGH.

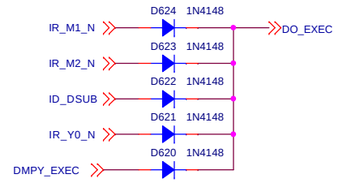

Active, except when result of current instruction must be discarded (for DMPY instruction)

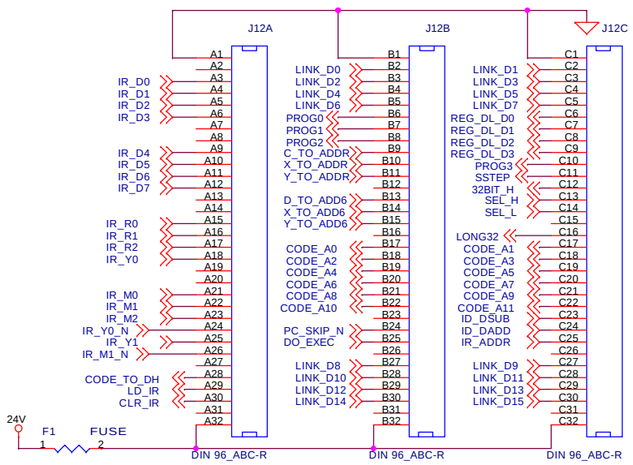

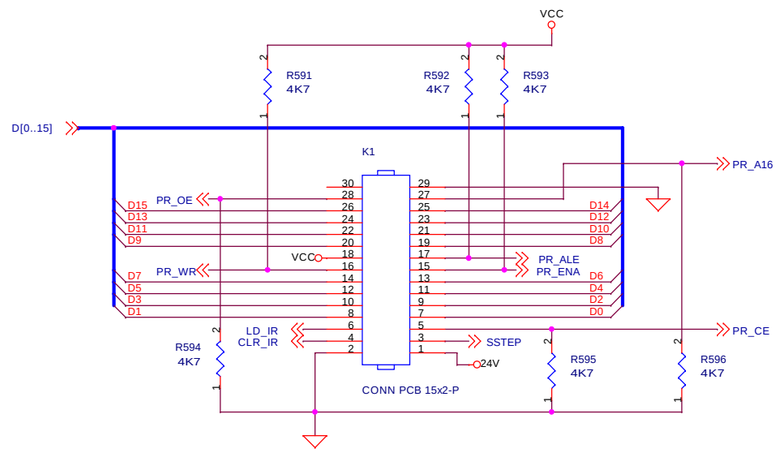

Programmer connector

RISC Relay CPU
PROG
PROG1750