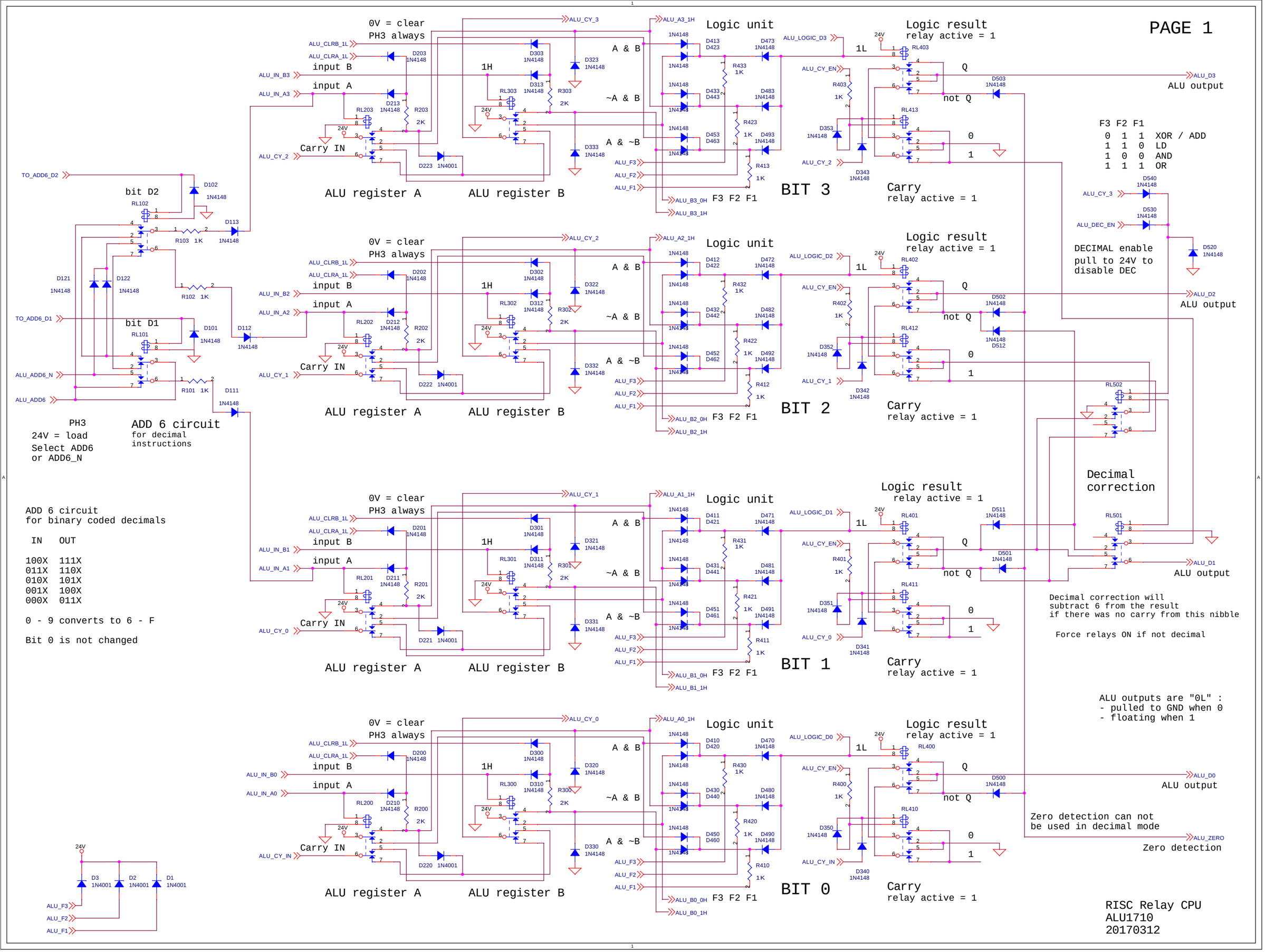

ADD 6 circuit
for binary coded decimals

IN	OUT
100X	111X
011X	110X
010X	101X
001X	100X
000X	011X

0 - 9 converts to 6 - F

Bit 0 is not changed

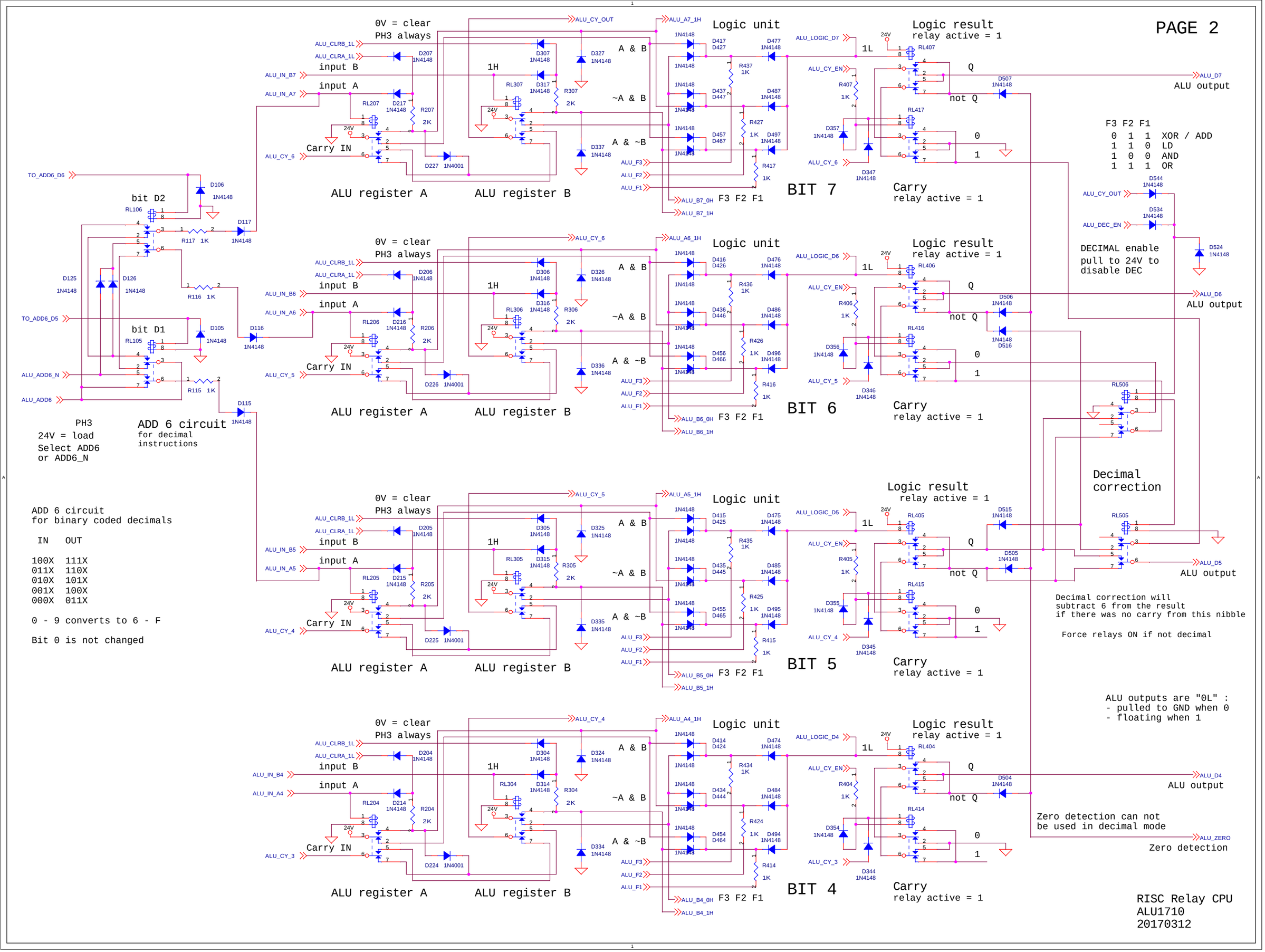

ADD 6 circuit
for binary coded decimals

IN	OUT
100X	111X
011X	110X
010X	101X
001X	100X
000X	011X

0 - 9 converts to 6 - F

Bit 0 is not changed

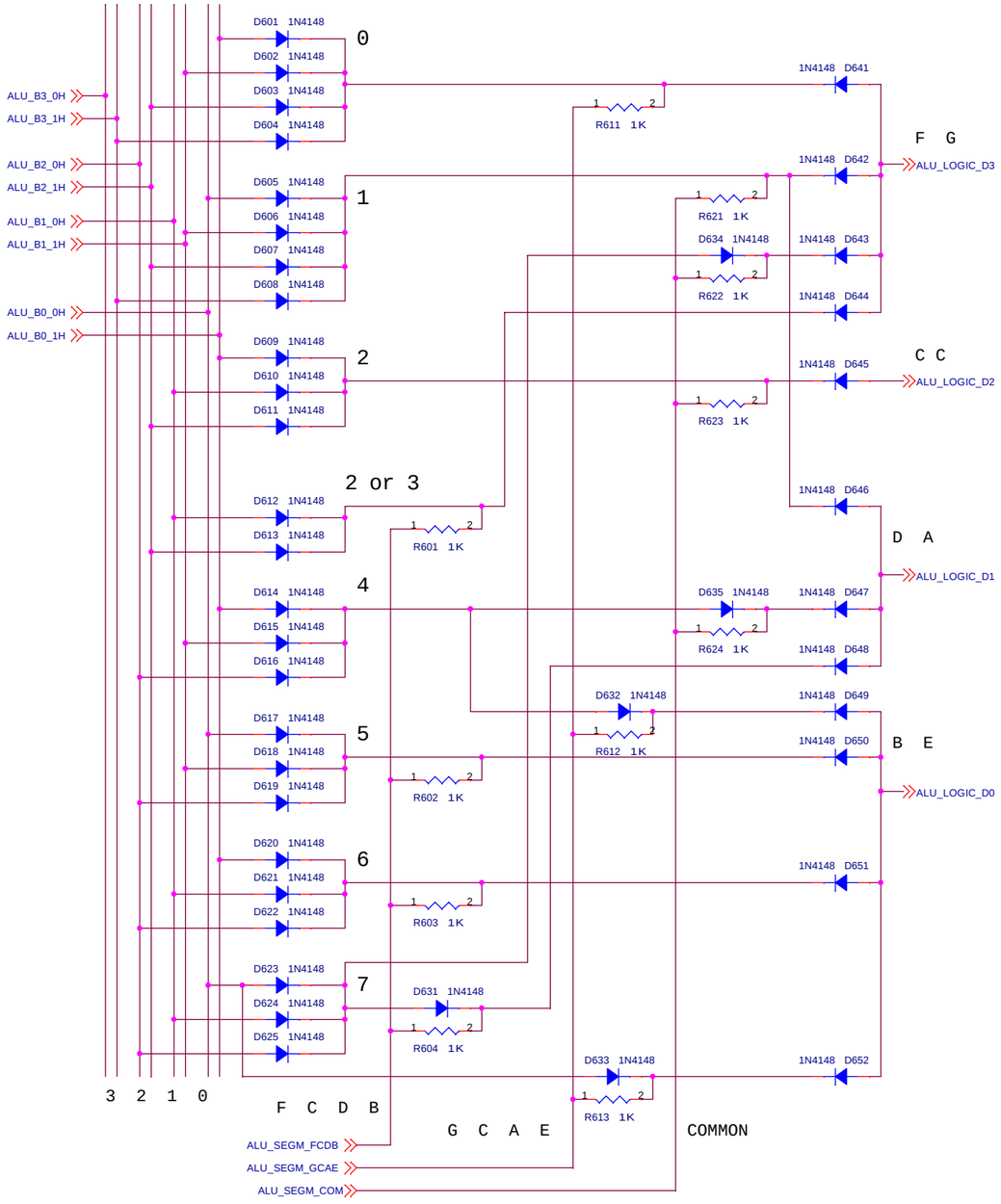

7 segment coder for bit 0 - 3

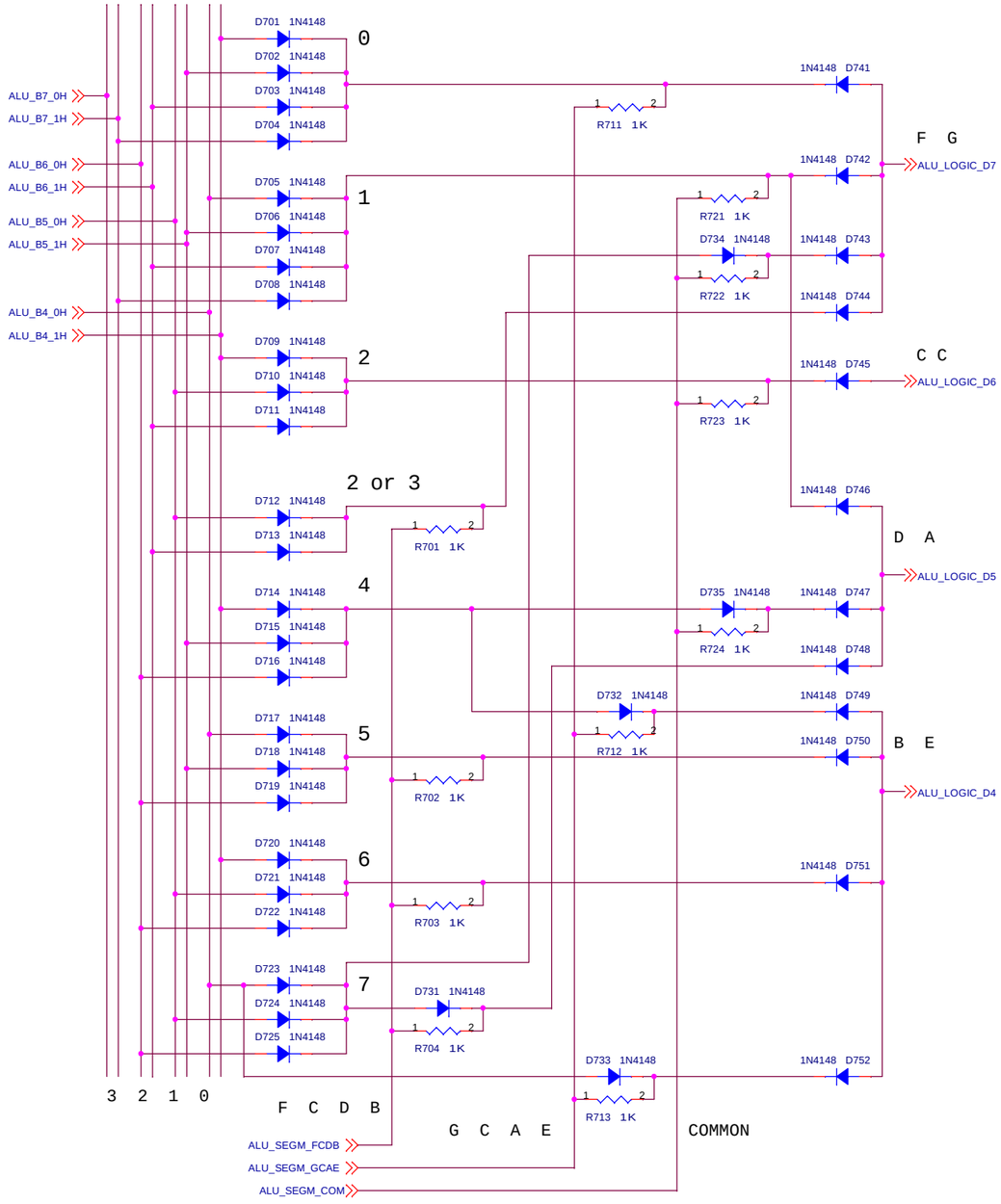

7 segment coder for bit 4 - 7

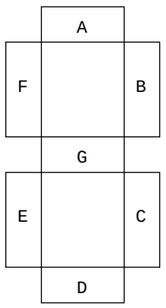

Segments OFF for each digit
0 G
1 G F D A
2 F C
3 F
4 D A E
5 B
6 B
7 G F D

Extra actions connected to input pins:
Databit 0: Segment E OFF

RISC Relay CPU
ALU1710
20170312

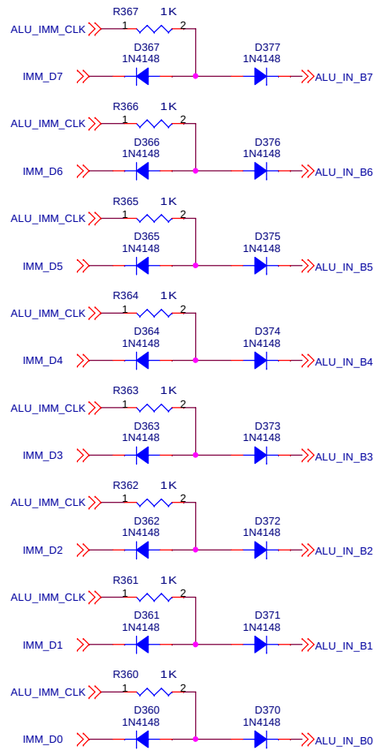

IMMEDIATE OPERAND

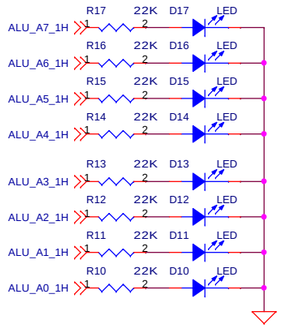

Register A indicators

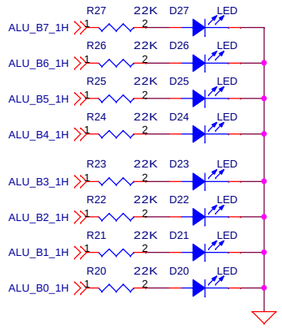

Register B indicators

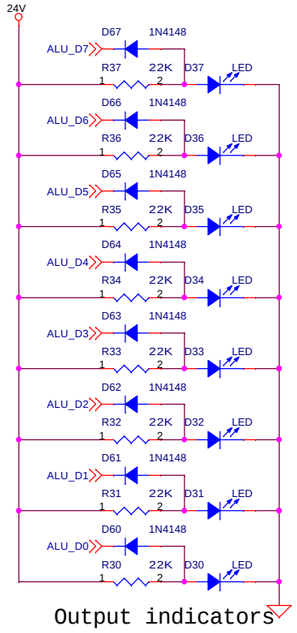

Output indicators

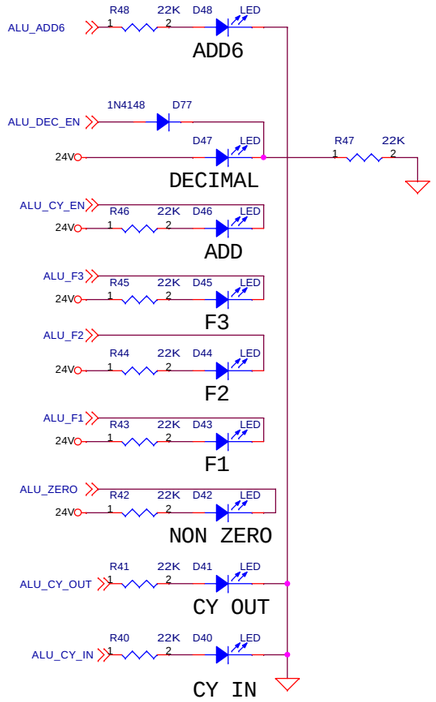

CY IN

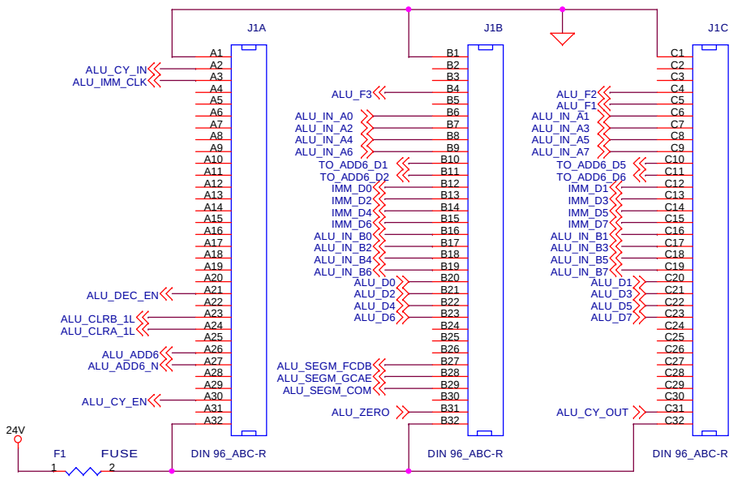

ALU CONNECTOR

RISC Relay CPU
ALU1710
20170312