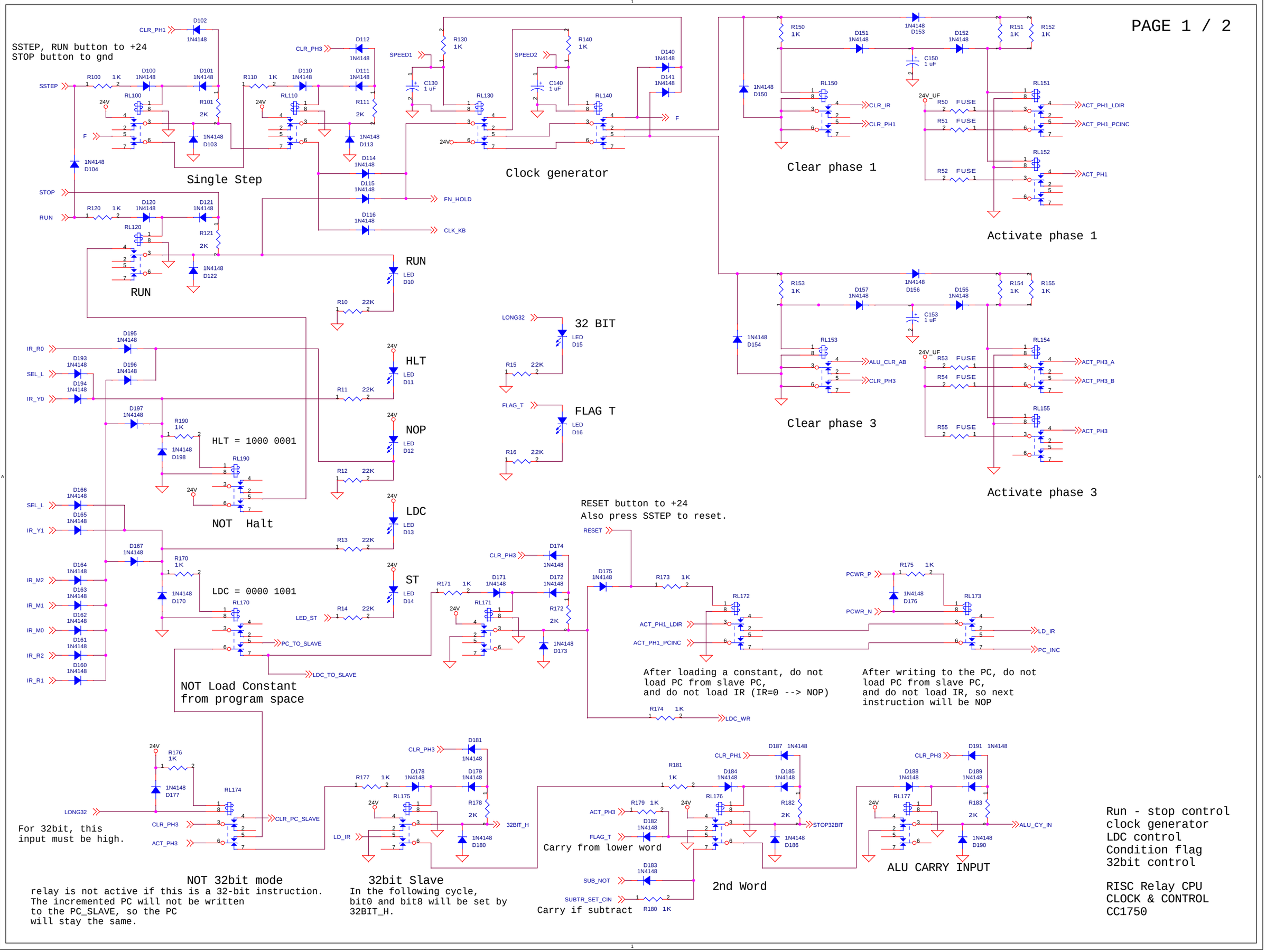
PAGE 1 / 2
SSTEP, RUN button to +24
STOP button to gnd
Single Step
Clock generator
Clear phase 1
Activate phase 1
RUN
HLT
NOP
LDC
ST
32 BIT
FLAG T
Clear phase 3
Activate phase 3
HLT = 1000 0001
NOT Halt
LDC = 0000 1001
NOT Load Constant
from program space
RESET button to +24
Also press SSTEP to reset.
After loading a constant, do not
load PC from slave PC,
and do not load IR (IR=0 --> NOP)
After writing to the PC, do not
load PC from slave PC,
and do not load IR, so next
instruction will be NOP
For 32bit, this
input must be high.
NOT 32bit mode
relay is not active if this is a 32-bit instruction.
The incremented PC will not be written
to the PC_SLAVE, so the PC
will stay the same.
32bit Slave
In the following cycle,
bit0 and bit8 will be set by
32BIT_H.
Carry from lower word
Carry if subtract
2nd Word
ALU CARRY INPUT
Run - stop control
clock generator
LDC control
Condition flag
32bit control
RISC Relay CPU
CLOCK & CONTROL
CC1750

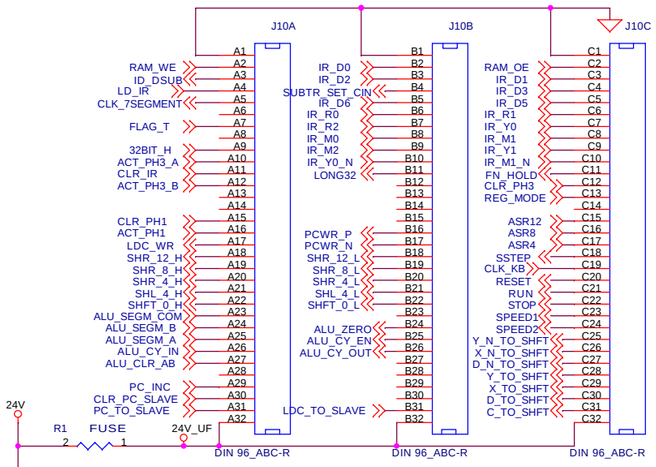

Clock and Control

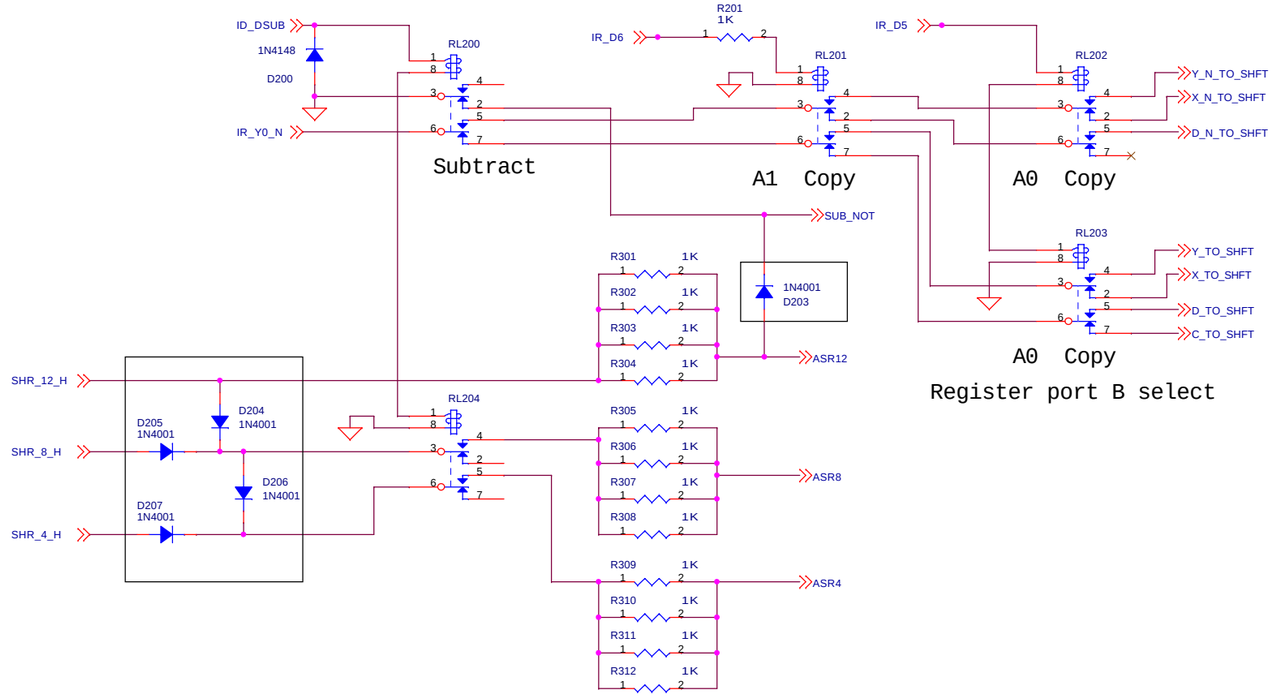

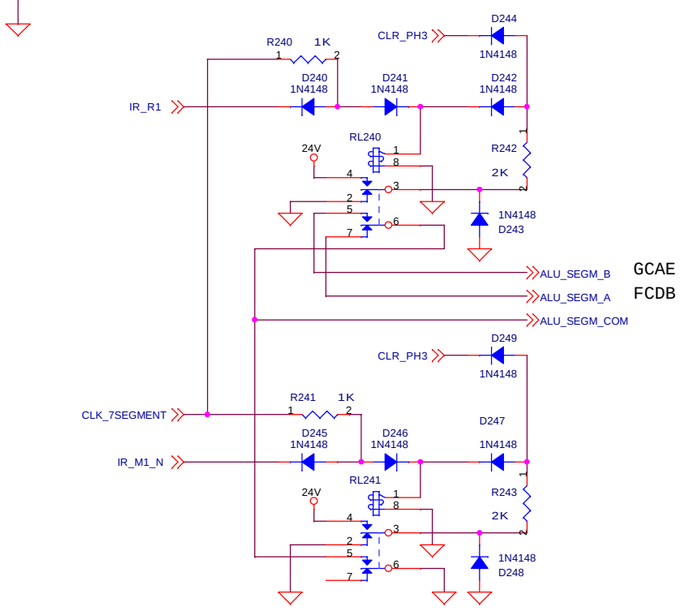

7-segment
display coder

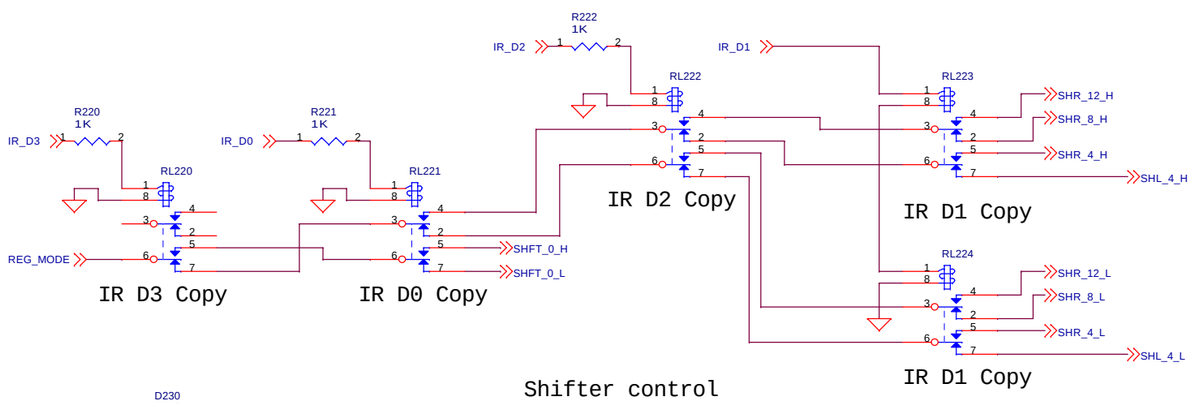

Shifter control

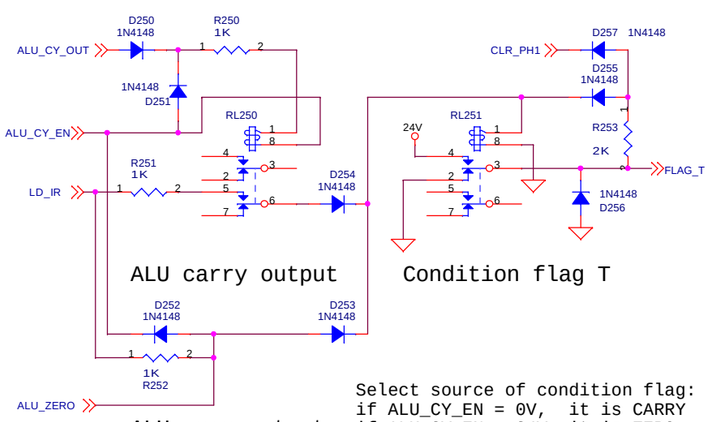

Select source of condition flag:
if ALU_CY_EN = 0V, it is CARRY
if ALU_CY_EN = 24V, it is ZERO

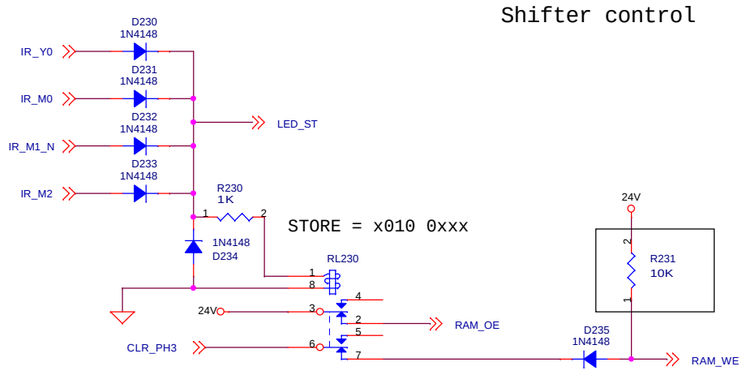

NOT Store

RISC Relay CPU
CLOCK & CONTROL
CC1750